ITEM	QTY	PART NO	REV	DESCRIPTION
1	1	60301780	-	CONSTRUCTION ASSY
2	2	40915381	-	TRUCK ASSY, 6-1/2 X 9, S.S.R.M., 2W WHL
3	1	60301980	-	PAINT AND DECAL ASSY
4	1	60301880	-	BRAKE ASSY
5	1	70582400	-	HAND BRAKE ASSY, LONG HANDLE, GROUP N - GENERIC
6	1	70818600	-	BRAKE STEP, 28 LONG, MORTON
7	1	31081100	-	BRAKE DIMENSION PLATE
8	2	70566920	-	TRANSPORTATION TAG, BEAM POWERED, HIGH TEMP, MODEL - GENERIC
9	1	70365301	-	MISSING LINK,3/8,ALLOY,LOCK PIN STYLE - GENERIC
10	-	-	-	-
11	4	70400802	-	BOLT SEAT, SLOTTED, MORTON: 701-214
12	4	70746200	-	BOLT, 1/2 X 1-1/2, RD HD, SHORT SQ NK UNC-2A, ZINC
13	4	70612700	-	NUT, 1/2, HVY HEX, UNC, ZINC PL, A563 GR A
14	2	70576500	-	WASHER, 1/2, PLAIN, TYPE A, WIDE, ZINC PL
15	4	70209901	-	CAPSCREW, 5/8 X 2, HEX, UNC-2A, ZINC PL, GR 2
16	4	70023101	-	WASHER, 5/8, TYPE A, PLAIN, WIDE, ZINC PL
17	4	70912800	-	NUT, 5/8, HVY HEX, UNC, ZINC PL, A563 GR A
18	2	70008501	-	CAPSCREW, 3/8 X 1, HEX, UNC-2A, ZINC
19	2	70375500	-	WASHER, 3/8, PLAIN, TYPE A, WIDE, ZINC PL
20	2	70576401	-	LOCKNUT, 3/8, UNC, HVY HEX, ZINC PL, NYLON INSERT, GR 5
21	1	70496104	-	LOCKWASHER, HELICAL, 7/8 - GENERIC
22	1	70496103	-	NUT, 7/8, HEX - GENERIC
23	1	70496105	-	COTTER PIN, 3/16 X 1 1/2 - GENERIC
24	2	30998092	-	CENTER PIN LOCKING ASSY - A.S.F.

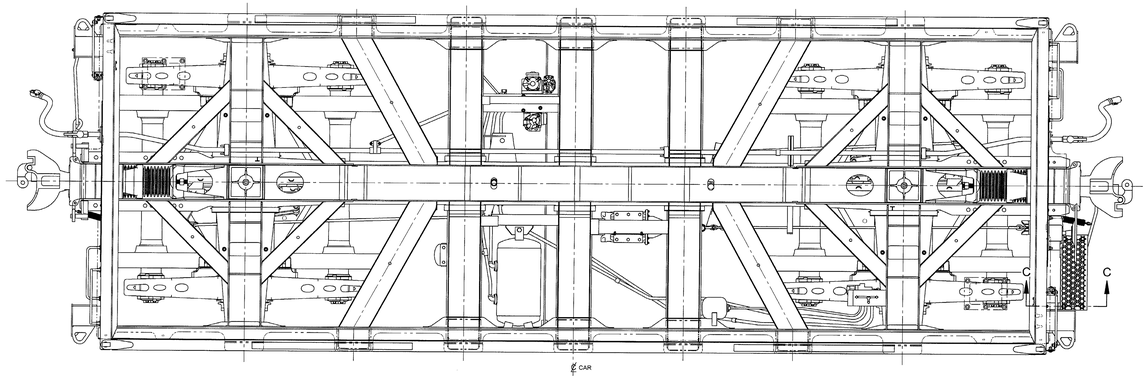

FLOOR SHOWN IN PHATHOM FOR CLARITY

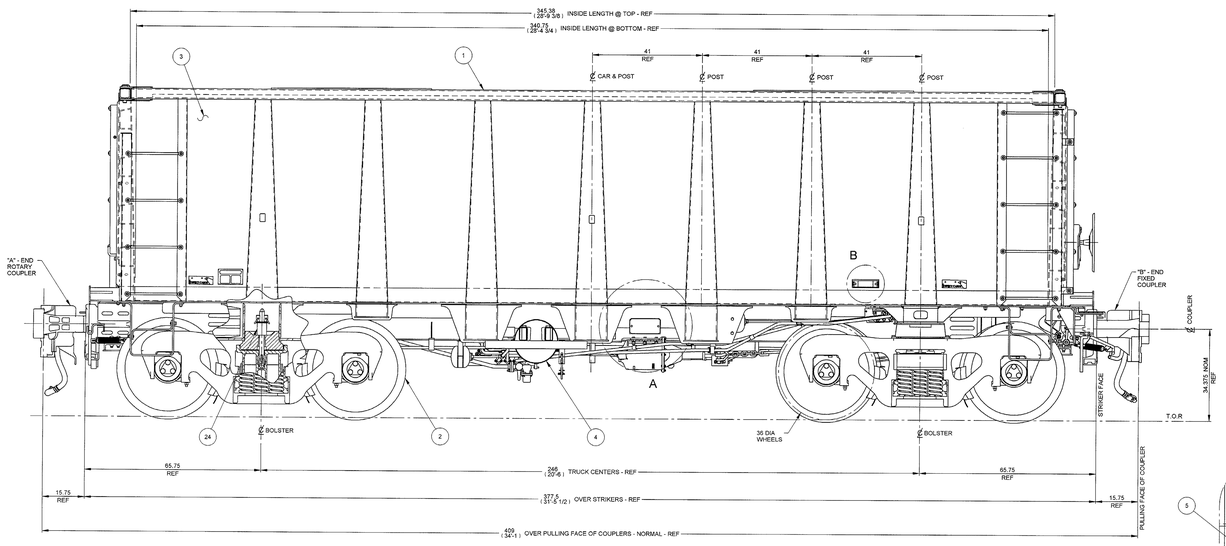

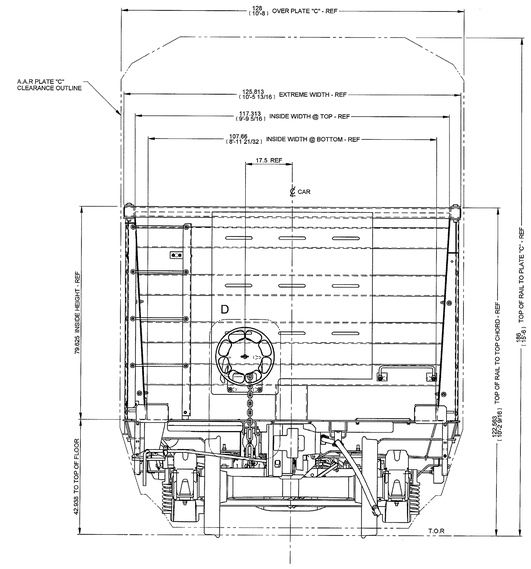

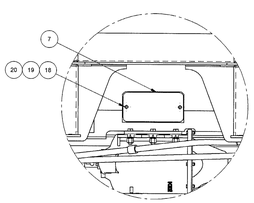

DETAIL A

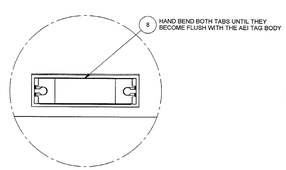

DETAIL B

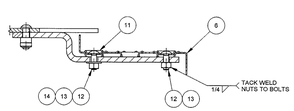

SECTION C-C

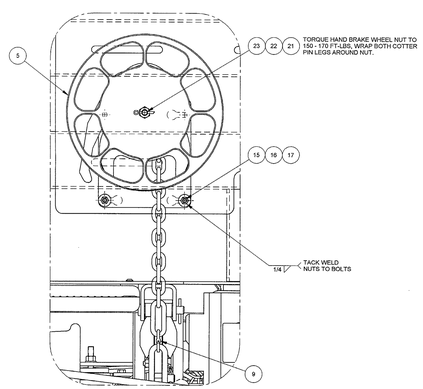

DETAIL D

MANUFACTURING WELDING REQUIREMENTS

- ALL TACK WELDS MUST BE FUSED INTO THE FINAL WELD.
- ALL TACK WELDS ARE 3/16" X 1-1/2" FILLET WELDS UNLESS NOTED OTHERWISE.
- IN ORDER TO PREVENT NOTCHES, ALL WELDS SHOULD TERMINATE A MINIMUM OF 1/2" FROM THE EDGE OF THE PLATE UNLESS OTHERWISE.
- ALL WELDING PROCEDURES ARE TO BE DOCUMENTED IN ACCORDANCE WITH AWS D15.1 LATEST REVISION AND APPROVED BY THE NSC DIRECTOR OF WELDING TECHNOLOGY. FOLLOW WPDS & APPROVED ELECTRODES POSTED ON WORK BOARDS.
- WELDING PROCEDURES ALL CONFORM TO LIMITS AS PER AWS D15.1 LATEST REVISION.

REV	DATE	BY	DESCRIPTION
A	10.01.26	RAJ	ITEM 9 WAS 70496111. ITEM 10 WAS 70496110. DIM. INSIDE LENGTH @ TOP, WAS 344.75.

DR G. Chan DATE 09.10.08 CHK M.Suffoletta DATE 09.12.15
DWG APP'D PN DATE 09.12.15 DSG APP'D K. Black DATE 09.12.15
REF: 60293381 WT.LBS: 52198.8 APP'D D. Vial DATE 09.12.15

DRAWING TOLERANCES
UNLESS OTHERWISE SPECIFIED LINEAR DIMENSIONS ± 0.25 ANGULAR DIMENSIONS ± 1
ALL DIMENSIONS ARE IN INCHES

NATIONAL STEEL CAR LIMITED, COPYRIGHT 2008, 2010
THIS DRAWING MUST NOT BE COPIED, REPRODUCED, TRANSMITTED ELECTRONICALLY OR USED FOR ANY PURPOSES OTHER THAN THE PURPOSE FOR WHICH IT IS LOANED WITHOUT THE WRITTEN PERMISSION OF NATIONAL STEEL CAR LIMITED AND IS PROVIDED TO OUR CUSTOMERS FOR THEIR EXCLUSIVE USE. THE DESIGN AND INFORMATION IS CONFIDENTIAL AND MUST NOT BE PROVIDED TO OTHERS WITHOUT WRITTEN CONSENT.

TITLE
GENERAL ASSY

NATIONAL STEEL CAR LIMITED
HAMILTON ONTARIO

DWG 60302080 REV A